Influence of Subsurface Details on Braced Excavations in Puerto Rico

Alan R. Crumley, F. ASCE [1]

This is a condensed version of a paper presented at the ASCE National Convention in October, 1998 at Boston.

Abstract

This paper discusses the importance of subsurface details in the design of braced excavations in areas having complex stratigraphies, such as exist in the sedimentary valleys found in islands such as Puerto Rico and continental coastal areas. To demonstrate the problems that can occur when details of stratigraphy and hydrographic conditions are overlooked, a case history is presented where substantial movements of the sheetpile walls of a circular cofferdam occurred due to excess hydrostatic pressures at the bottom of a deep excavation. Another example demonstrates the dangers of extrapolation of subsoil conditions from few borings; in this case, sheetpiles were driven such that some sheets were left above the toe support layer, whereas other sheets did not even reach the excavation bottom due to hard driving. A final example illustrates a detailed exploration program which successfully revealed a confined aquifer that was depressurized to avoid uplift.

Introduction

Although Puerto Rico is a small island, it has a population of 4 million and has experienced rapid growth and development in the past 5 decades. It requires a sophisticated infrastructure which is continuously being upgraded and expanded. Deep excavations are frequently required. To illustrate the influence of subsurface details on deep, braced excavations in Puerto Rico, three case histories are presented.

Case History I - A Deep Excavation Affected by Blowup

In the town of Mayagüez, a sewage treatment plant was under construction, including a deep pumping station. Because of the depth of excavation, soft soils and high water table at the pumping station, the contractor had decided to use a sheetpile braced cofferdam. The total depth of excavation was 14.6 meters.

The site lies 3 kilometers east of the ocean. Soils in this area consist of deep soft

[1] Partner, GeoConsult, PO Box 362040, San Juan, Puerto Rico 00936-2040

alluvial deposits (depths up to 50 meters) overlying thin residual soils and weathered sedimentary rocks. Mixed with the soft clays and peats, lenses of sands are frequently found. Water flows from the nearby mountains lying some 2 kilometers to the east and replenishes the coastal valley. Water levels at coastal locations in Puerto Rico typically lie 30 to 60 centimeters above sea level, with ground surface at the coast a few meters above sea level.

A rectangular braced cofferdam had failed in the initial stages of construction and had been substituted by a circular cofferdam with a new designer. The first set of sheetpiles had been cut at various levels and left in place, being cut as necessary as the second excavation progressed. The second cofferdam encircled the outline of the first cofferdam and most of the pumping station that was under construction, as shown in Figure 1. This second cofferdam consisted of 65-foot-long (19.8 m) interlocking sheetpiles driven from elevation 0.61 meters (+2 ft), with four (4) circular reinforced concrete rings acting as interior supports; the rings were 1.5 m wide by 0.9 m high (5 x 3 ft). The required bottom of the excavation was elevation -9.76 meters (-32 ft).

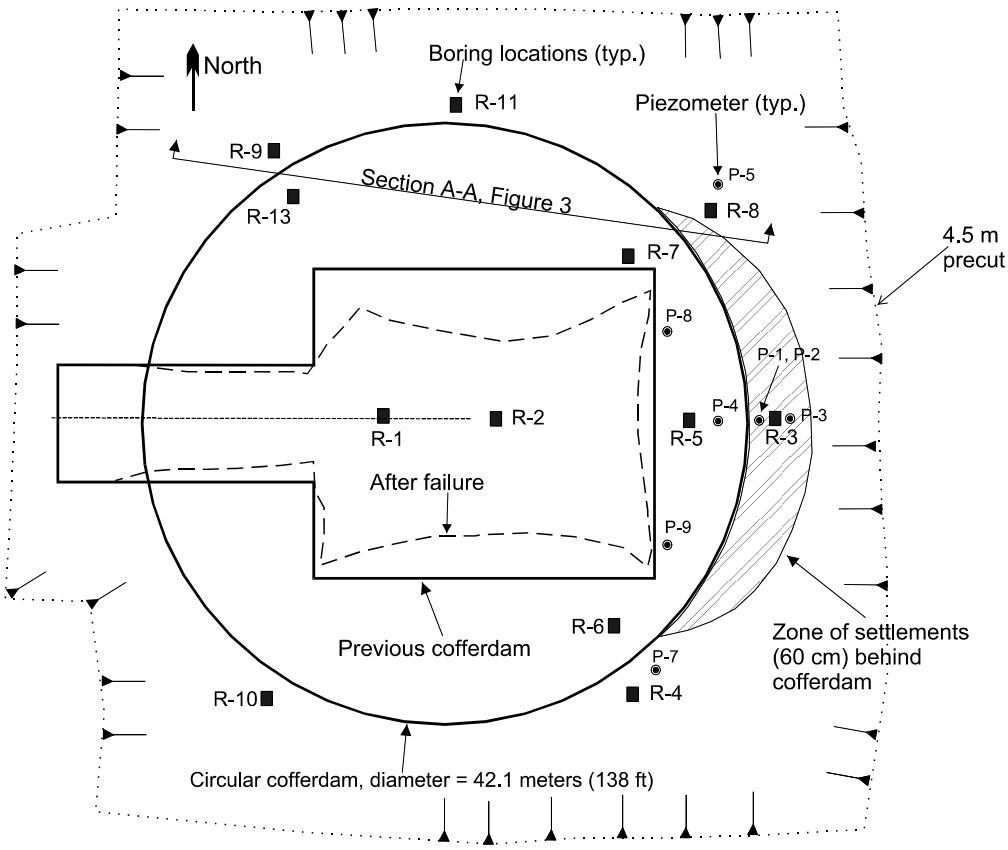

Figure 1. Plan View

Substantial inward movements of the second set of sheetpiles occurred at a location just below the third ring, after excavation to elevation -9.0 meters (-29.5 ft) in preparation for construction of the fourth ring. These movements occurred over a weekend. The east side of the cofferdam appeared to have been lifted as the sheetpiles moved inward, hinging about the bottom of the third ring. At this level, it was evident that the sheets had moved inwards at least 1.5 meters (5 ft) and were inclined roughly 2V:1H. The area behind the zone of movements had settled on the order of 60 centimeters (see Figure 2). It was also apparent that the top of the sheets in this area was lower than when originally driven. In addition, some settlements of the concrete compression rings had occurred towards this area.

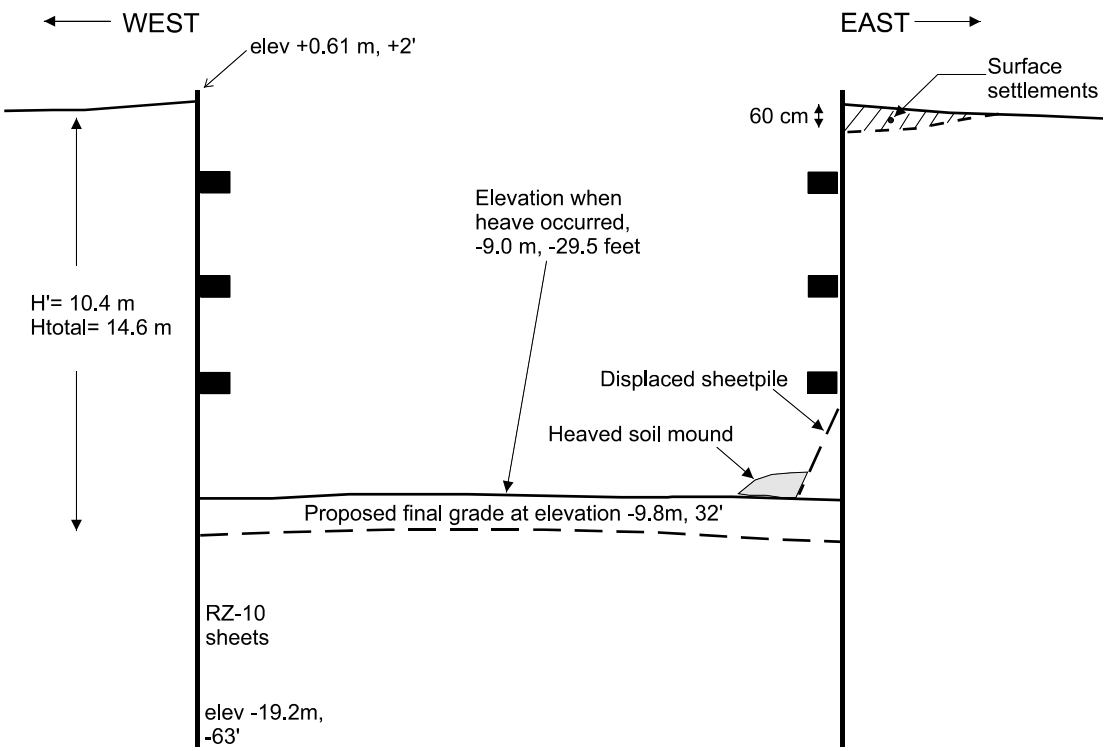

Figure 2. Cross-section of the Circular Cofferdam

Thereafter, the excavation bottom at -9.0 meters (-29.5 ft) was backfilled by the contractor to elevation -7.6 meters (-25 ft). Nevertheless, movements of the rings and the sheetpiles continued for several days. These movements consisted of settlements of the rings and tops of sheetpiles (about 13 centimeters), and separation of the uppermost lengths of sheetpile from the first ring (particularly at the east side), as if they were tilting away from the compression ring

Subsurface Conditions

Borings were advanced using continuous sampling behind the area where movements occurred outside the circular cofferdam at the east side. The borings showed soft cohesive soils (s_u ~ 10 to 40 kPa, 0.1 to 0.4 tsf) to approximate depths of 11.4 meters (37.5ft) below elevation +0.61 meters (+2 ft), with a 60-centimeter layer of fine sandy silt below. Thereupon, a 1.2-meter-thick layer of clayey silt and black peat of medium consistency was found. Past depths of 12.8 meters (42 ft), there were cohesive soils of stiff to very stiff consistency (s_u ~200 to 300 kPa, 2.0 to 3.0 tsf). Water flowing under pressure was found in the borings at depths of 11.9 meters (39 ft) and 15.9 meters (52 ft), and piezometers and observation wells were installed.

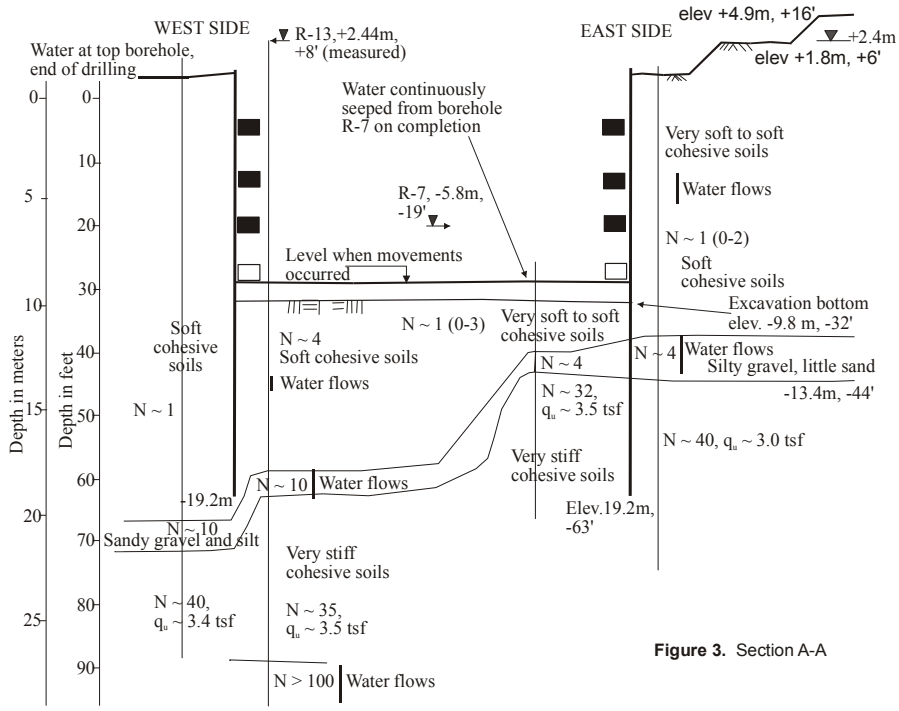

Figure 3. Section A-A

During both construction designs (the first and second cofferdams), it had been assumed that the underlying strata were continuous and that the various strata were uniformly distributed. The foundation design before the bid had been based mainly on two nearby borings; these boreholes were drilled using 1.5-meter (5') sampling intervals. The borings drilled after the movements occurred, within the affected zone, showed that the sheetpiles were embedded in hard soils; a cause for these movements was not readily apparent. Thus, a boring was drilled at the northwest periphery where no movements had been recorded. This boring presented a different layering sequence. Soft soils were found to elevation -18.6 meters (-60.9 ft) and the tip of the sheetpiles was shown to be barely into a medium silty clay layer. Beneath this layer and below the sheetpile tips, there was a 1.5-meter-thick (5 ft) layer of sandy gravel and silt down to elevation -20.9

meters (-68.4 ft), followed by the very stiff silty clays also found in other borings. Surprisingly, the bottom of the sheets was not seated into the underlying hard clays, as indicated on Figure 3, West Side.

Water Pressures

Seven (7) piezometers and one (1) observation well were installed. Interior relief wells or drains were installed inside the excavation. The interior water levels were near elevation -5.8 meters (-19 ft). Figure 4 is a graph of water pressures from the date of the failure until shutdown towards the completion of foundation construction for this structure. The interior sand drains were passive relief wells, 15 cm (6 in) holes drilled to depths of 11.3 meters (35 ft) inside the east side of the excavation and filled with sand and gravel, with 2-inch-diameter (5 cm) PVC casings, at typical spacings of 4.5 meters. Water flowed from these drains and was collected in sumps, as water levels inside the cofferdam decreased.

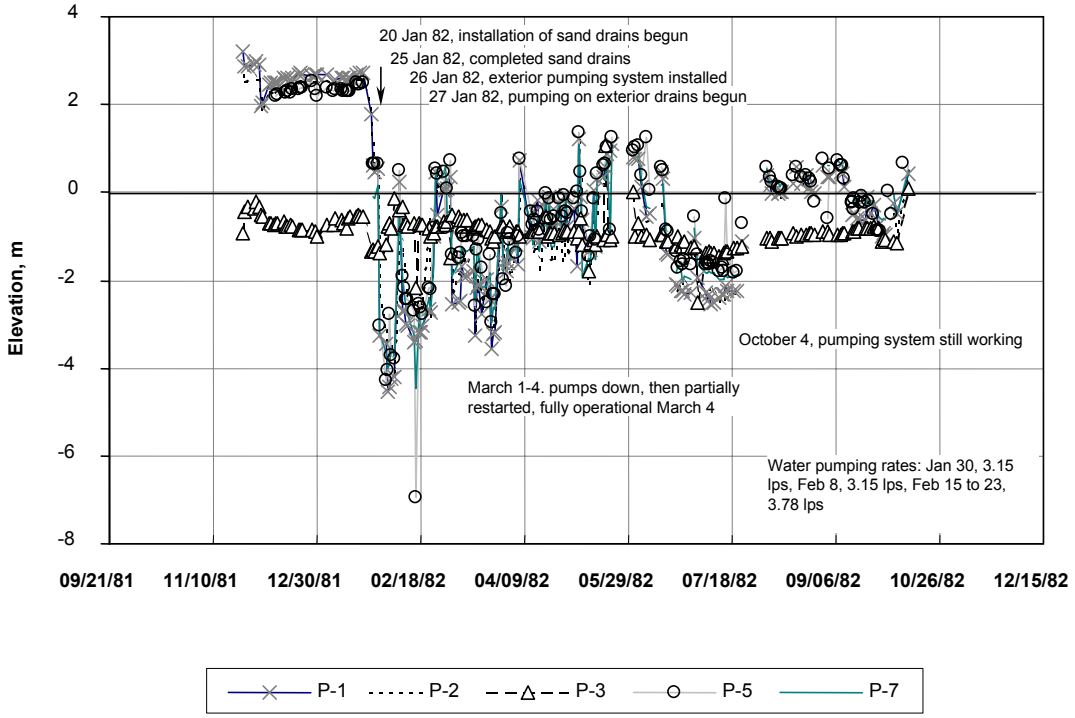

Figure 4. Piezometers Inside Circular Cofferdam

Rainfall records indicate that precipitation for the year in question (1981) at the site was much higher than the historical average. In fact, the recorded rainfall for 1982 is the second highest historical record (the highest rainfall occurred in 1968). The rainfall which was recorded is 40 percent higher than the average for the previous or

subsequent 3 years, and 26 percent higher than the 30-year average (1957 through 1996). It is probable that the pervious strata lying within the soft soils are also connected to upland areas and replenished by rainfall in the nearby mountains.

Lateral Pressures

After failure of the first (rectangular) excavation, it appeared that the easternmost wall moved inwards laterally as the interior bracing failed. When these sheetpiles were later removed, it became apparent that most of these sheets were bent twice along their length, first a kink indicating relative movement of the upper part into the excavation, then a reverse kink showing resistance opposite the direction of movement, as if the sheets at the tips were held back or restrained.

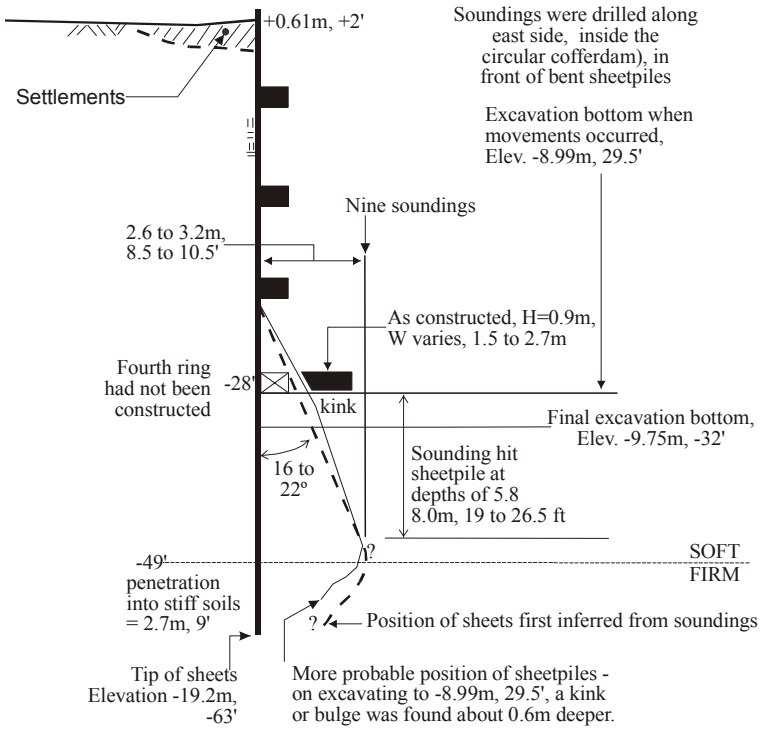

Figure 5. Displaced Sheetpiles, According to Soundings

Soundings drilled within the second (circular) cofferdam confirmed that the tips of the sheets moved inward; the soundings were drilled until metal was encountered. The soundings indicated lateral inward movements, as shown on Figure 5. Much later, after excavating for the fourth ring, it was shown that the sheets had a kink or bulge about 60 centimeters below the bottom of the excavation at the moment when movements occurred. This kink was in the reverse direction from the inward movements. The inverse direction of the kink indicates that the tip of the sheetpiles piles

did not rotate inward in a circular failure arc within a slipping or sliding soil mass. Strain-gauge readings taken throughout the life of the project, from instruments installed by the structural designer within the concrete rings, indicated that loads to the compression rings did not exceed the design loads.

Cause(s) of Movements

It became evident that the underlying stiff clay layer was inclined and that it dipped considerably so that the sheetpiles driven at the northwest side did not reach the stiff clay, furthermore ensuring that pervious strata lying above were not sealed. In spite of the lack of penetration into stiff soils at this side, there were no movements or signs of structural distress in this area of the excavation due to base failure. Where displacements occurred (east side), the tips of the sheets were into very stiff to hard soils. Moreover, whereas the presence of fairly uniform soft and then hard cohesive strata had been assumed beneath the excavation, in at least one instance (the northwest side) the sheetpile tips were not embedded in the underlying stiff clays, and we confirmed that a granular layer beneath the sheetpile tips permitted flows into the excavation.

With the subsoil information obtained, it was concluded that the movements were caused by uplift of the inner soils lying above the granular layer. The movements occurred after uplift of the inner soils, causing loss of interior support to a substantial length of the sheetpile. The exterior forces would continue to act; the sheetpile would have to move inward due to its inability to resist such excessive unbalanced forces. Bending of the sheetpile would begin to occur somewhere below the third ring. Further below, the sheetpile tip was in hard clay. Eventually, the sheetpile would move, either by rotational displacement of the tip or by being pulled from its clay socket. The presence of the kink or bulge previously mentioned (Figure 5) confirms that movements occurred in this sequence, after the bottom soil was uplifted.

Uplift was caused by unbalanced forces acting at the contact of sand layers below impervious clays, with insufficient soil weight to counterbalance this force. Taking the pervious layer at elevation -11.4 m (-37.4 ft) and water pressure to -5.79 m (-19 ft) when the bottom reached elevation -8.99 m (-29.5 ft), the following balance of forces is computed:

$$(11.40 - 8.99\text{m}) \times 1.76\ \text{t/m}^3 = 41.56\ \text{kPa (downward weight of soil)}$$
$$(11.40 - 5.79\text{m}) \times 1.00\ \text{t/m}^3 = 54.98\ \text{kPa (upward water pressure)}$$

The net uplift pressure is about 14 kPa (300 psf). Noting the soil's low shear strength, the factor of safety is near one. Any slight variation in water pressure would cause uplift. As a result of this unbalance of forces, uplift occurs.

After uplift, interior lateral support was lost, causing structural instability of the

support systems. The instability was enhanced by the unbalanced water pressures on each side of the sheetpile, possibly aided by the weight of the concrete rings and the natural tendency of the soils inside the excavation to heave due to elastic rebound.

Case History II - Extreme Subsurface Variations Within a Small Deep Excavation

An excavation was required for construction of a 12.2-meter-deep pump station, also in the town of Mayagüez. This pump station lies some 5 kilometers from the previously-discussed structure. The geology is similar, with soft organics and loose sands overlying weathered volcaniclastic sandstone, siltstone and mudstone. Mountains lie less than one kilometer to the east.

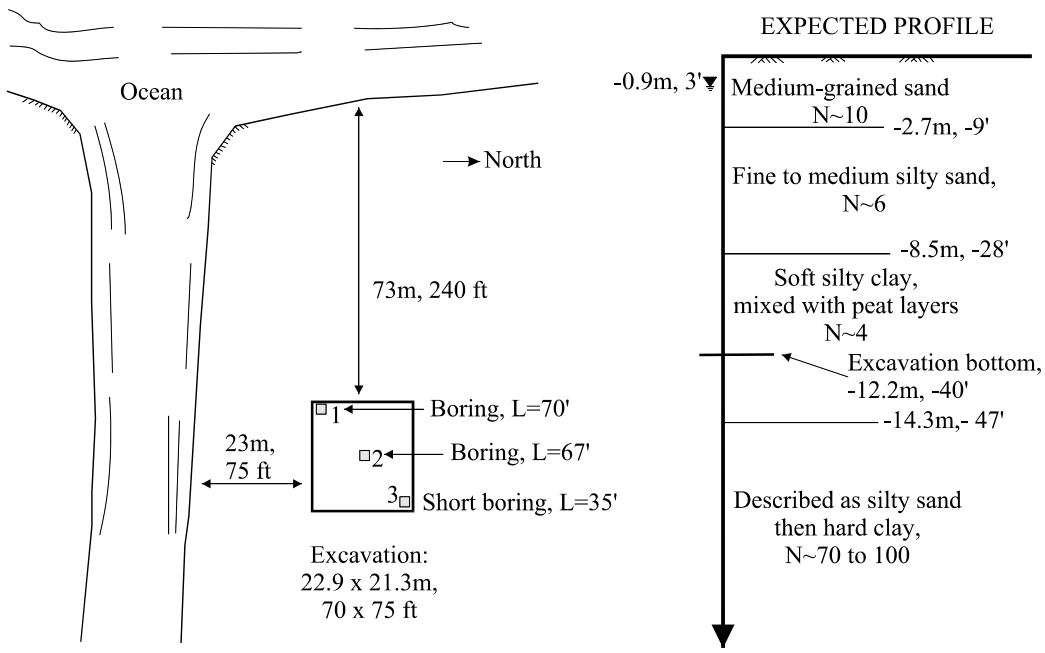

Figure 6. Location and Expected General Profile

The excavated area was to be 22.9 by 21.3 meters (75 x 70 ft). The pump station was sited 73 meters from the ocean and 23 meters from a small river on another side. Three borings had been drilled during design on a diagonal line across the proposed structure, as shown on Figure 6; they showed loose silty sands to depths of 12 meters with interlaying soft soils, including a 1.5-meter layer of peat. On award of the bid and based on the design borings, the contractor had purchased 18.3-meter (60 ft) sheetpile sections (Larssen II-S, 70 kg/m). They were initially driven with a vibratory hammer (LB Foster 275E).

While driving these sheetpiles, it became apparent that on the north and west

sides of the excavation the sheets did not penetrate fully and in some instances did not even reach the bottom of the excavation. The piles were redriven using a Link Belt 520 hammer (35.9 kN.m or 26,500 ft-pounds) but additional penetration was minimal, never exceeding 1.5 meters. One of the sheets was pulled and showed excessive damage at the tip. However, at other areas (east and south) the piles were easily inserted and reached the 18.3-meter depths using the same vibratory hammer (see Figure 7). The shallow sheetpile penetrations were unexpected and particularly worrisome, since lack of embedment below the excavation bottom could lead to instability.

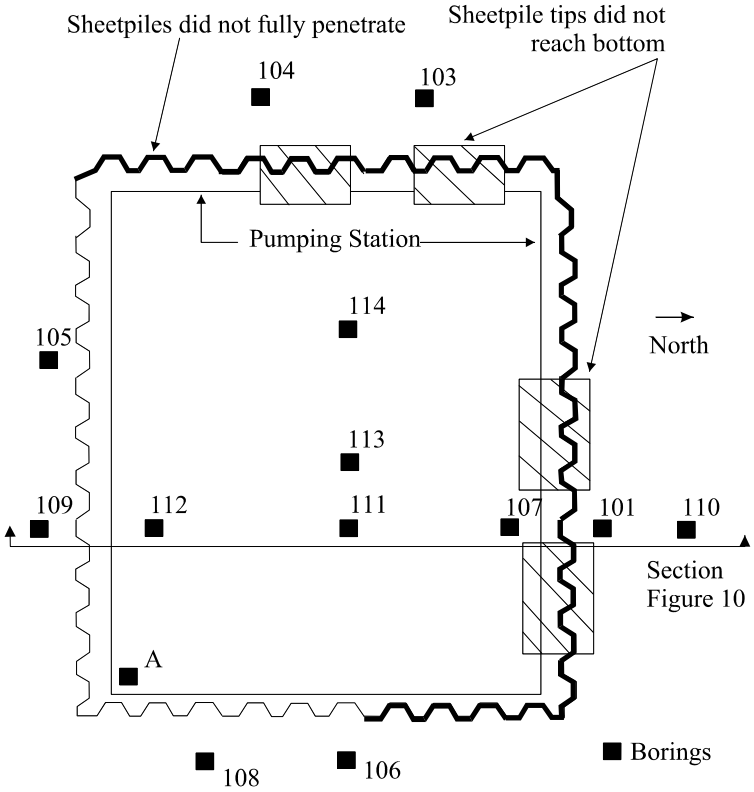

Thick sheetpile line indicates areas where sheetpiles did not fully penetrate.
Hatched zones indicate areas where sheetpile did even not reach excavation bottom.

Figure 7. Sheetpile excavation

Additional borings were drilled along the sides of the excavation. Figure 8 shows the subsoil profile obtained after the last investigation. The saprolitic material from weathered volcanics clearly varied in depth throughout the site, from 9 meters on one side to 22 meters on the other. Clearly, one side of the excavation would enter the saprolite or weathered rock, whereas the other side of the excavation would still be in soft soils. To the north, the sheets could not penetrate to the excavation bottom, whereas to the south, the sheets sank their full length under a vibratory hammer.

Lateral pressures on each side of the excavation would vary and cause uneven displacements, given the variations in depths of soft and loose soils. Since there were no nearby structures, uneven displacements and surface settlements did not concern us. Stability of the excavation was another concern, as some of the sheets did not reach the excavation bottom (Figure 8). On inspection of the saprolite samples, it was observed that the weathered rock was massive and would perform as an impervious mass, similar to a clay soil, notwithstanding the fact that the samples, once recovered, behaved as friable silts. Water was not expected to flow freely through this soil which retains many characteristics of the parent rock. The short term strength of the saprolite was undoubtedly high; experience in these soils indicates that the undrained cohesive strength is not lost with time or is available for a long time, possibly due to cementation.

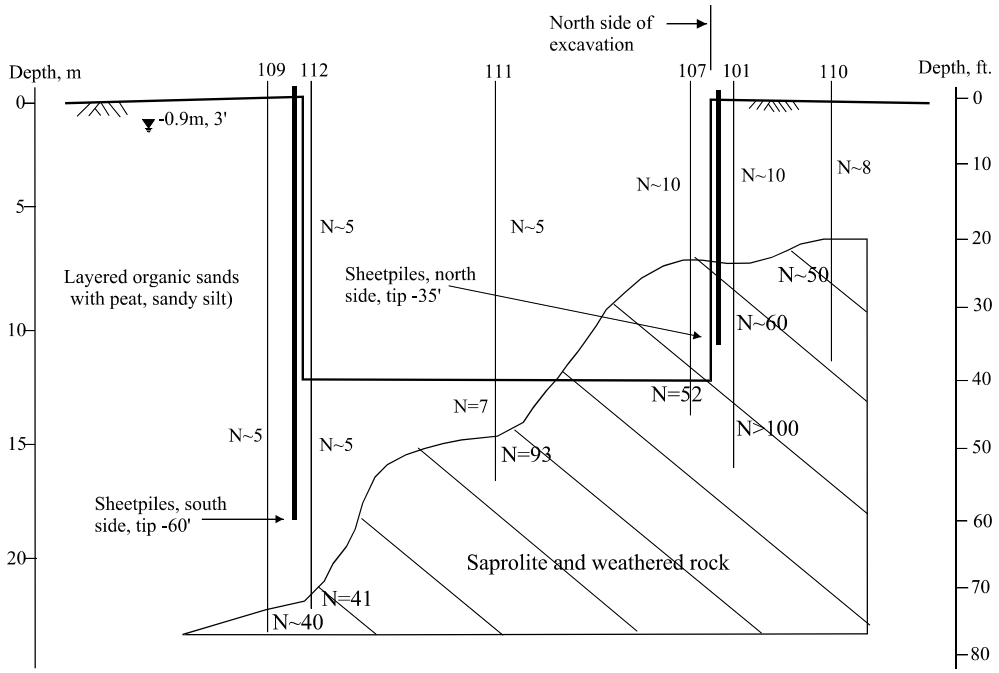

Figure 8. Actual Subsoil Profile

The excavation was taken to the bottom and successfully completed. At one of the locations where the sheets did not reach the excavation bottom, a large flow of water did develop just above the saprolite and under some sheets which had split open at the bottom due to heavy driving. After flooding the excavation, these flows were sealed by driving additional sheets just behind this zone. The saprolite held up extremely well and water flows through this material did not develop. The lower saprolitic soil performed as a hard cohesive material and a stable excavation was achieved. Nonetheless, an excavation which first appeared to be a textbook case, actually confirmed the well-known yet often-unheeded observation that subsurface conditions can change

significantly over short distances.

Case History III - A Deep Excavation in Alluvials Overlying an Artesian Layer

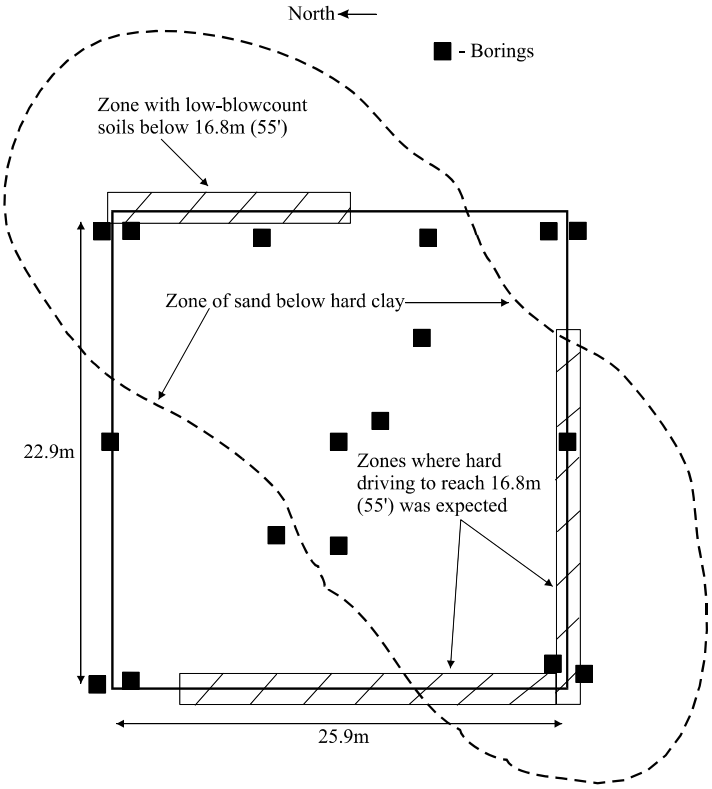

Figure 9. Plan View

A pumping station was to be constructed, with the excavation sized at 22.9 by 25.9 meters (Figure 9). The excavation depth was 14.6 meters (48 ft) and water was found at a depth of 2.1m (7 ft). Six borings were drilled during design using standard 5-foot (1.5-meter) sampling intervals. They revealed soft soils overlying a calcareous basement, and did not penetrate deeply into the stiff materials. Borings drilled during the excavation design using continuous sampling showed soft soils to depths of 14.6 meters (48 ft) with several layers of sand. Below this depth, the soils consisted of stiff to hard clays, followed by the calcareous rocks. However, some of the

Finally, a brief discussion of a deep excavation in Metropolitan San Juan illustrates the importance of geologic details in other types of formations. In this case, alluvial terrace deposits overlie calcareous deposits. These limestones are replenished by rains in the nearby mountains and artesian pressures are common. Blowup or uplift is possible whenever a confined aquifer exists beneath an excavation, depending on the thickness of the soil plug below the excavation bottom and the water pressures, as indicated in the first case history.

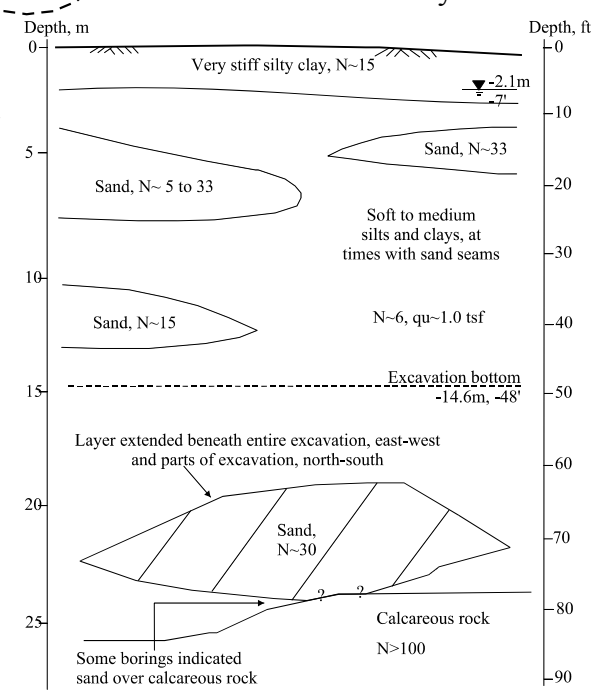

Figure 10. Subsoil Profile

borings also revealed the presence of a layer of clean medium to coarse sand within the stiff clay, as shown in Figure 10.

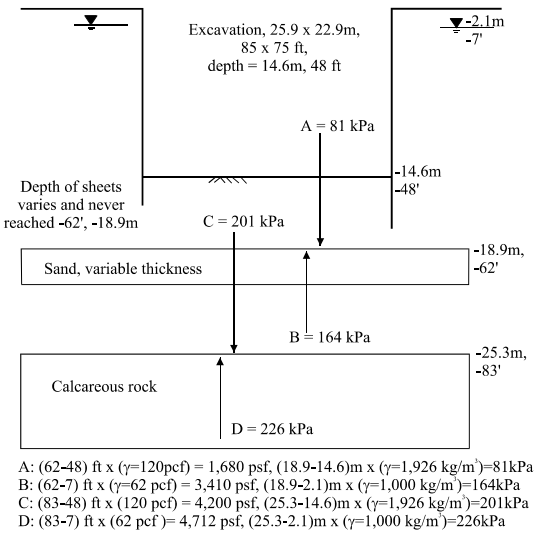

Figure 11. Blowup Formulation

Piezometers did not indicate pressures which greatly exceeded the general phreatic surface. However, the presence of a trapped aquifer was cause for concern as the excavation bottom would lie near the sand layer. Since sheetpiles could not penetrate the hard clay layer to seal against water flows, water pressures could blow the excavation bottom, as the weight of the soil plug was less than the probable water pressures (shown on Figure 11). While the sand layer did not extend over the entire area, the pressures were sufficiently unbalanced so that blowup was cause for concern.

Blowup is usually not a problem in trench excavations, since the shear strength of a soil plug can be utilized so that even in soft soils the factor of safety is greater than one. For this case, use of the soil's shear strength in the balance of forces shown above would have been inappropriate since the areal extent of the sand layer was far greater than the width of any soil plug. Assuming a confined layer, it was calculated that pumping 88 lps (1,400 gpm) would be required for reduction of the water pressure by 8.5 m (28 ft), so that the soil weight was the same as the uplift pressure. Four deep wells were installed as shown on Figure 12 but were not overly effective. The construction of the wells was highly suspect, due to inappropriate well screens with low entrance areas and doubts regarding installation of the well gravel packs, particularly their location with respect to the pervious layers and their thickness. Erroneous permeabilities could also

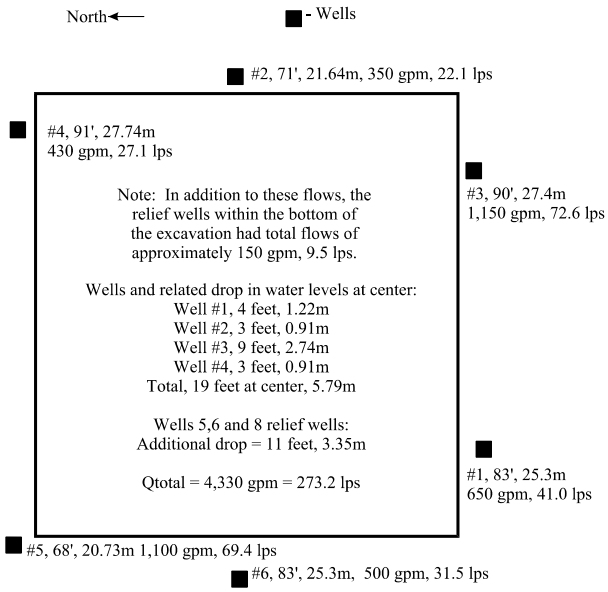

Figure 12. Wells and Pumping Rates

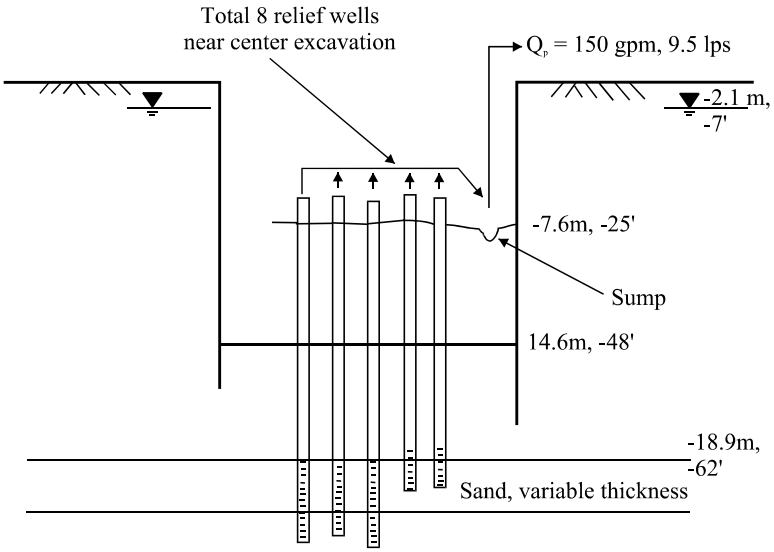

Wells(8) installed on reaching -25 ft, -7.6m. The water sump was moved as excavation proceeded. Wells were passive wells and water flowed without pumps from pipes and onto ground through gravel working mats to sumps.

Figure 13. Relief Wells Within Excavation

have been obtained from an initial pumping test on the first deep well, or the sands and calcareous soils below could be interconnected. Nonetheless, in spite of the wells, piezometers in the center of the excavation showed that drawdown was only 5.8 m (19 ft) whereas 8.5 m (28 ft) were required to avoid blowup.

Although the contractor had not wanted deep wells within the excavation due to space limitations, it was finally decided to install a series of passive relief wells within the excavation bottom, taking these wells to a sump (Figure 13) with two additional exterior deep wells (#5 and #6). The pressure then dropped below the required levels (to -9.1m, -30 ft) and the excavation was completed. Pressure relief was immediate as the passive wells were installed, since they were located in what is undoubtedly the most effective location, near the excavation center.

Conclusions

1. Design of deep excavations requires knowledge of the site geology and clear definition of the stratigraphy and water flows. The subsurface investigation must be carefully planned and designed to uncover changes in stratigraphy. The presence and effects of water-bearing layers must be determined.

2. Unbalanced water pressures below the excavation can cause blowup or uplift, endangering the excavation. Passive relief wells inside the excavation are very effective for reduction of these unbalanced pressures.

3. While it sometimes seems trite and overemphasized, subsurface conditions can change over short distances. Erroneous conclusions can be drawn from meager data. In particular, deep excavations in island or continental coastal scenarios should immediately be cause for extensive soil investigations.

4. Based on the cases herein presented, the subsoil investigation must include sufficient exploration to determine variations over short distances. Continuous sampling and pumping tests will be preferred whenever water flows are an issue. In hindsight and in view of these case histories, the number of borings to drill for the excavation design should initially be about one boring every 100 square meters of excavation area, with substantial continuous sampling. The final excavation design may require one boring every 50 square meters. It is worthwhile noting that more borings could be drilled to design the excavation under this criterion than would be necessary for design of the structure, although this could be reduced if the site can be characterized using geophysical techniques. These cases emphasize the importance of minor subsurface details in excavation and dewatering design.